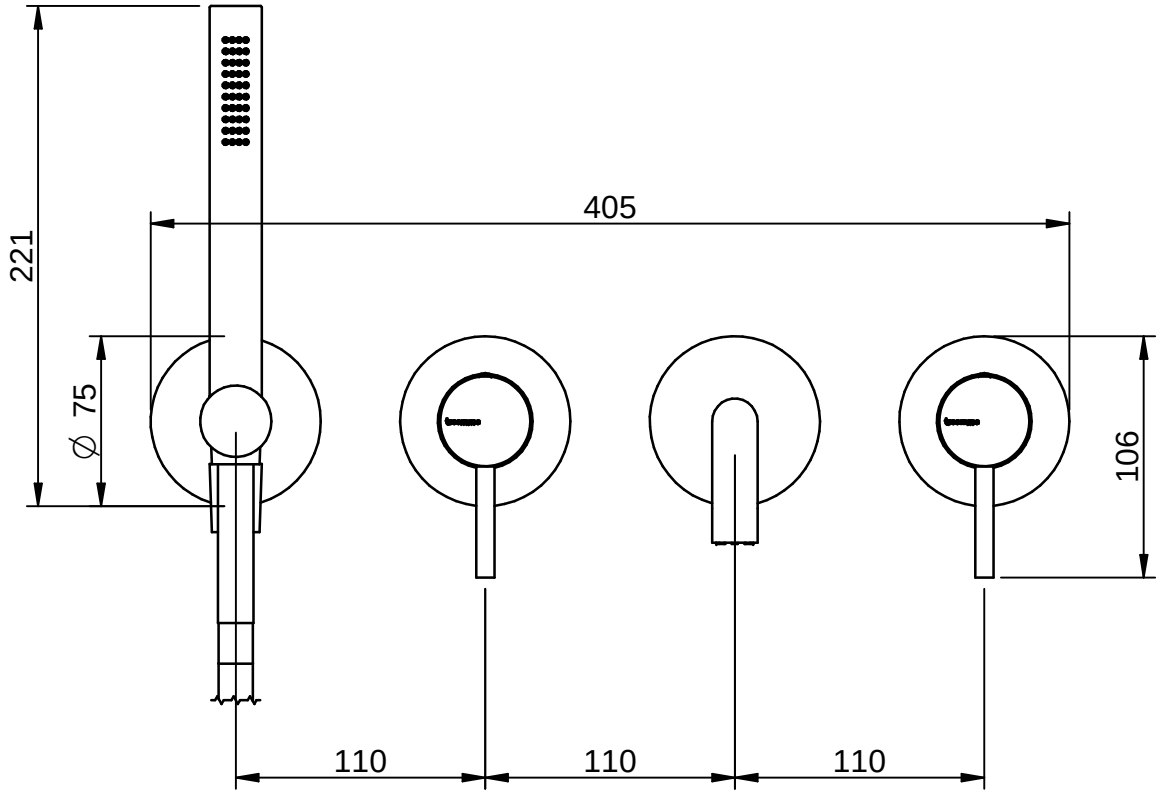

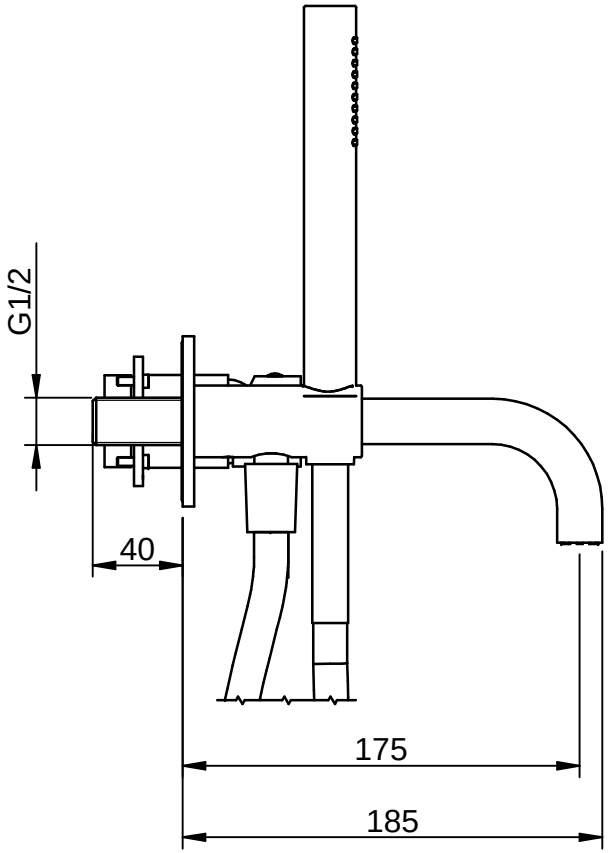

CODE ART. RWIT75D8CC01_I01

RUBINETTERIE
treemme