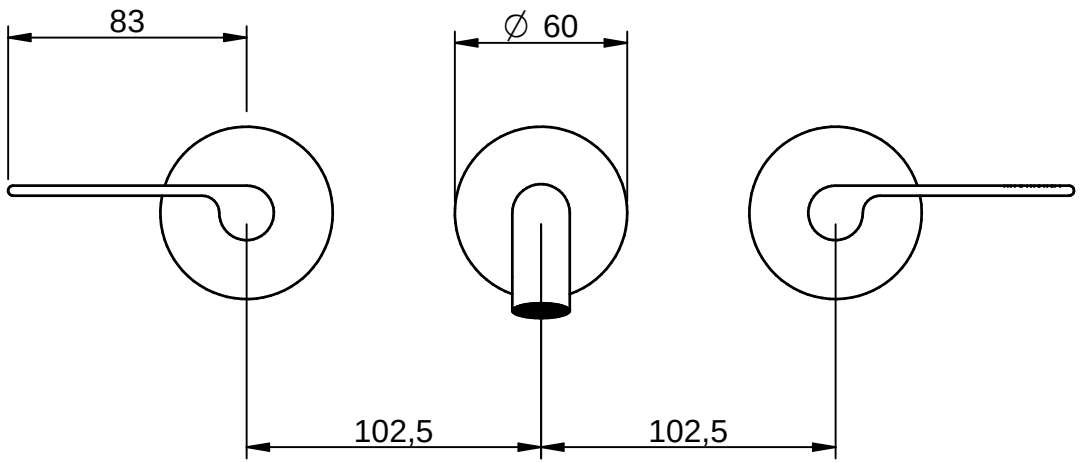

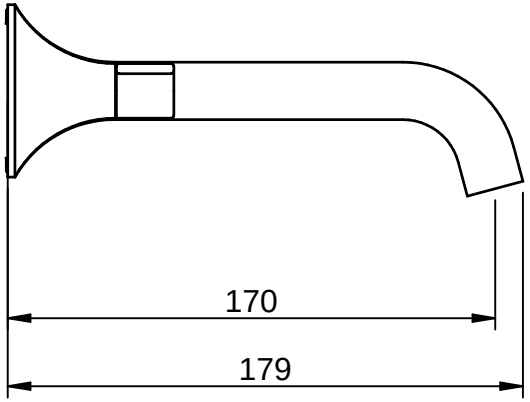

CODE ART. RWIT4552IS50_I01

RUBINETTERIE
treemme