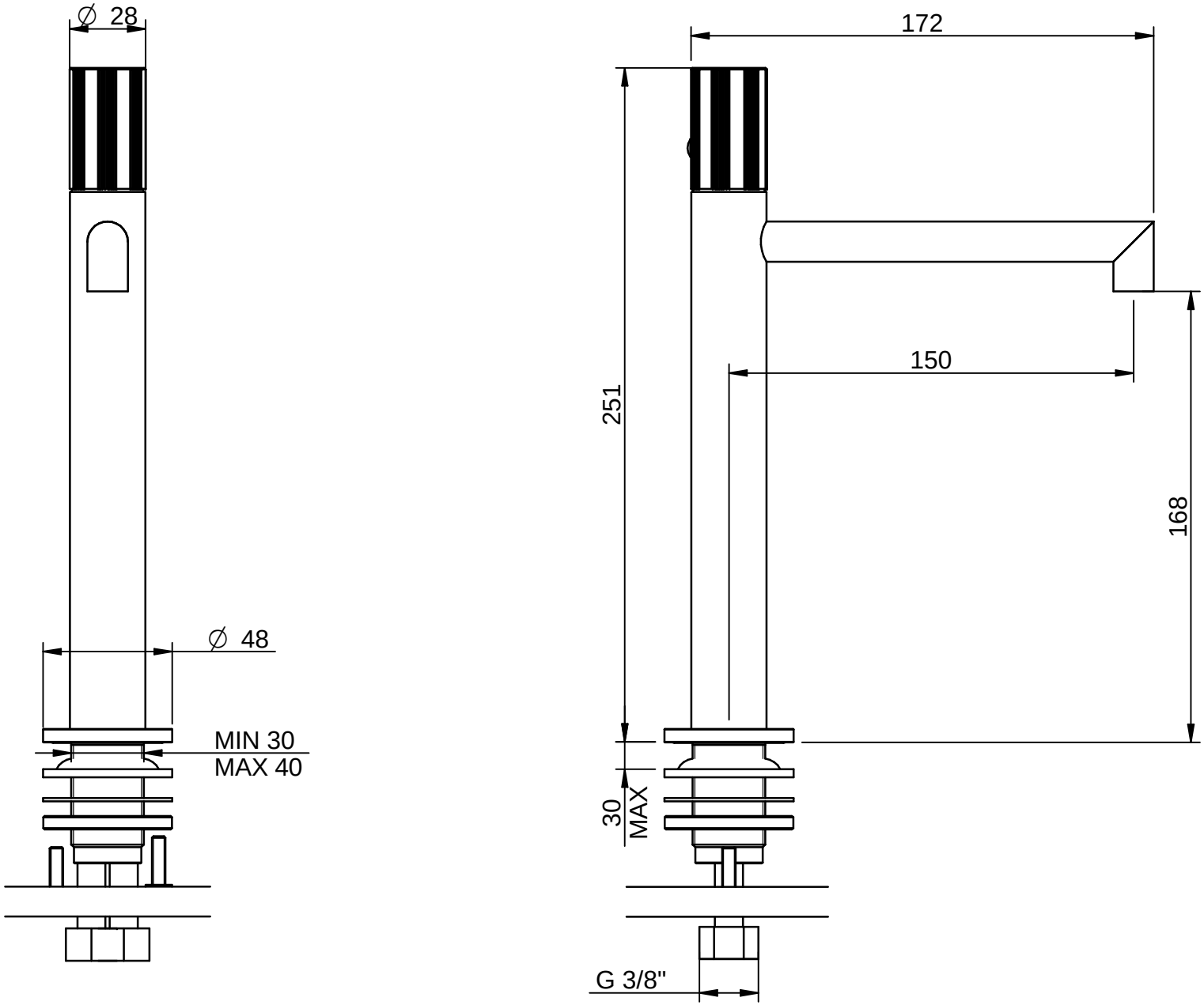

CODE ART. IT3B27ISG1ZZ_I01

RUBINETTERIE
treemme